Tutorial 8 21/02/2016

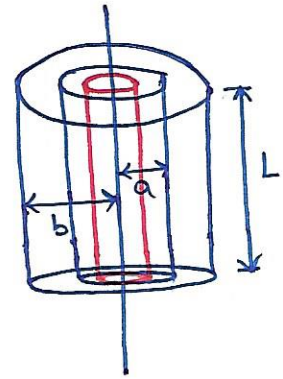

Region (i) $0 \leq r < a$.

The inner cylinder has a charge $+Q$ while the outer cylinder has charge $-Q$.

Consider a Gaussian cylinder of radius $r < a$ and length L. Apply Gauss's law

$$\oiint \vec{E} \cdot d\vec{a} = \frac{1}{\epsilon_0} Q_{enc} \Rightarrow E \cdot 2\pi r L = 0$$

Thus $E = 0$

Note that in a cylindrical symmetry, the field acts radially outward. For e.g consider a thick wire of line charge λ. Direction of field are as shown in arrows. It is clear that there is contribution of electric flux through the curved surface only and not through the circular surfaces. This has been discussed in class.

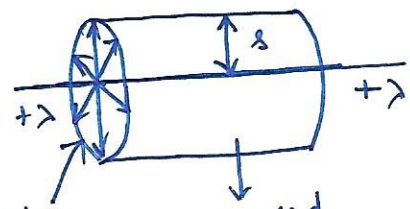

circular surface (do not contribute to flux as lines of $\vec{E}$ are perpendicular to $d\vec{a}$)

curved surface (contributes to flux)

To calculate potential in cylindrical symmetry, we have to be careful choosing the reference point. Normally from the definition of potential $V = -\int_{\infty}^{r} \vec{E} \cdot d\vec{l} = V(\vec{r})$, we choose 'infinity' as the reference point because $V(r \to \infty) = 0$. But in cylindrical cases, because of logarithmic dependence of potential V on 's' (like in the above case of a straight wire of line charge density λ), choosing 'infinity' as the reference point is no good idea. Let's choose $V(a)$ (which is zero) to be the reference point. So for $r < a$, $V(r) - V(a) = -\int_{a}^{r} \vec{E} \cdot d\vec{l}$. Note that $d\vec{l}$ is

referred to as line element in cylindrical co-ordinates

$\vec{dl} = ds(\hat{s}) + s\,d\varphi(\hat{\varphi}) + dz(\hat{z})$. For $\vec{E}$ depending on radial co-ordinate ($\hat{s}$) only, only first term in $\vec{dl}$ appears.

$$V(r) - V(a) = -\int_a^r \vec{E}\cdot\vec{dl} = 0 \quad [\because E = 0 \text{ inside inner cylinder}]$$

$$\therefore V(r) = V(a) = 0 \quad [\because \text{inner cylinder is grounded}]$$

For $0 \leq r < a$: $\boxed{\begin{array}{l} V = 0 \\ E = 0 \end{array}}$

(ii) Region (ii) $a < r < b$

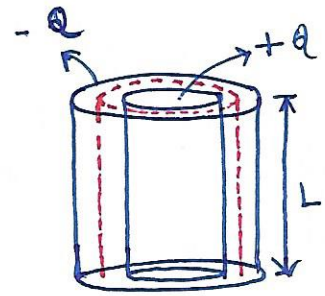

Consider a Gaussian cylinder of radius 'r' in between the two cylinders

$$\oint\!\!\oint_{\text{curved}} \vec{E}\cdot\vec{da} = \frac{1}{\epsilon_0} Q_{enc}$$

$$E \times 2\pi r L = \frac{Q}{\epsilon_0} \Rightarrow \boxed{E = \frac{Q}{2\pi\epsilon_0 r L}}$$

To calculate potential in region $a < r < b$

$$V(r) - V(a) = -\int_a^r \vec{E}\cdot\vec{dl} = -\int_a^r \frac{Q}{2\pi\epsilon_0 r L}\,dr = \frac{Q}{2\pi\epsilon_0 L}\ln\left(\frac{a}{r}\right)$$

$$\therefore \boxed{V(r) = \frac{Q}{2\pi\epsilon_0 L}\ln\left(\frac{a}{r}\right)} \quad a < r < b$$

(iii) Region (iii) $r \geq b$

Consider this time a Gaussian cylinder of length l $[l < L]$ outside the coaxial cylinders

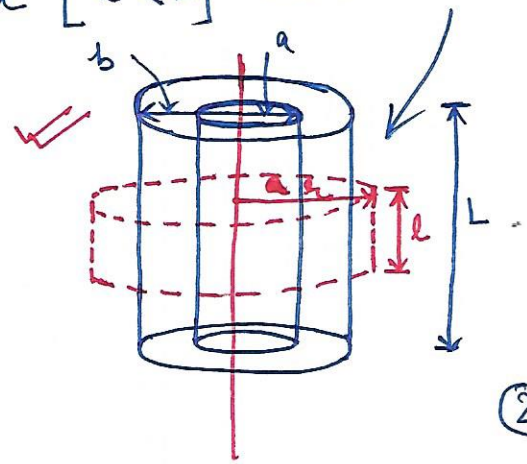

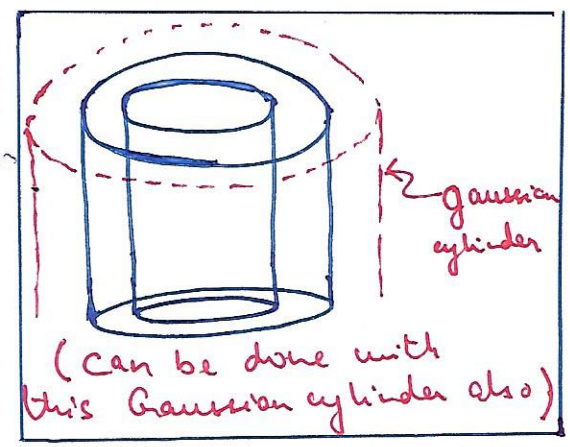

Apply Gauss's law over this surface

$$\oiint_{\text{curved}} \vec{E}\cdot d\vec{a} = \frac{1}{\epsilon_0} Q_{enc}$$

$$E \cdot 2\pi r l = \frac{1}{\epsilon_0}\left[\frac{Q}{2\pi a L} \times 2\pi a l + -\frac{Q}{2\pi b L} \times 2\pi b l\right]$$

surface charge density on inner conducting cylindrical shell

surface charge density due to outer conducting cylindrical shell

$$\therefore E \cdot 2\pi r l = \frac{1}{\epsilon_0}\left(Q\frac{l}{L} - Q\frac{l}{L}\right) = 0$$

$$\therefore \boxed{E = 0}$$

[Note that you could have used the same procedure, i.e considering Gaussian cylinder of length 'l' ($l < L$) to calculate the field $\vec{E}$ in region (ii) above – it would give you the same result]

To calculate potential in the region $r \geq b$, we can do it in two ways

i) continuity of electrical potential across a charged interface –

Since we know in region (ii) $a < r < b$, $V(r) = \frac{Q}{2\pi\epsilon_0 L}\ln\left(\frac{a}{r}\right)$

So on the outer surface (charged) $-Q$, the potential is:

$V(r=b) = \frac{Q}{2\pi\epsilon_0 L}\ln\left(\frac{a}{b}\right)$. So in principle outside $r = b$, the potential would be the same i.e $\boxed{V(r) = \frac{Q}{2\pi\epsilon_0 L}\ln\left(\frac{a}{b}\right)}$, $r \geq b$

iii) $V(r) - V(a) = -\int_a^r \vec{E}\cdot d\vec{l}$; $r \geq b$

$$= -\int_a^b \vec{E}\cdot d\vec{l} - \underbrace{\int_b^r \vec{E}\cdot d\vec{l}}_{0} = -\int_a^b \vec{E}\cdot d\vec{l} = -\int_a^b \frac{Q}{2\pi\epsilon_0 r L}dr = \frac{Q}{2\pi\epsilon_0 L}\ln\left(\frac{a}{b}\right)$$

$$\therefore V(r) - V(a) = \boxed{V(r) = \frac{Q}{2\pi\epsilon_0 L}\ln\left(\frac{a}{b}\right)}$$

2. At the surface of inner cylinder (radius 'a')

the discontinuity in $\vec{E}$ will be given by

$$\lim_{\epsilon \to 0} \left[\vec{E}(r = a+\epsilon) - \vec{E}(r = a-\epsilon) \right]$$

$$= \lim_{\epsilon \to 0} \left[\frac{Q}{2\pi\epsilon_0 L (a+\epsilon)} \hat{r} - 0 \right] \quad [\because \vec{E} = 0 \text{ for } r < a]$$

$$= \frac{Q}{2\pi\epsilon_0 L a} \hat{r} = \hat{r} \left(\frac{Q/2\pi a L}{\epsilon_0} \right) = \frac{\sigma}{\epsilon_0} \hat{r} \quad \left[\sigma = \text{surface charge density on inner cylinder} = \frac{Q}{2\pi a L}\right]$$

which is consistent with the general result $(\sigma/\epsilon_0)\hat{n}$

For electric potential on the surface of inner cylinder $(r = a)$

$$\lim_{\epsilon \to 0} \left[V(r = a+\epsilon) - V(r = a-\epsilon) \right] = \lim_{\epsilon \to 0} \left[\frac{Q}{2\pi\epsilon_0 L} \ln\left(\frac{a}{a+\epsilon}\right) - 0 \right]$$

$$= \frac{Q}{2\pi\epsilon_0 L} \ln\left(\frac{a}{a}\right) \quad [\because V = 0 \text{ inside } r = a]$$

$$= 0$$

Thus V is continuous as expected

Now we have to prove for outer cylinder (radius, $r = b$):

Discontinuity in electric field is given by

$$\lim_{\epsilon \to 0} \left[E(r = b+\epsilon) - E(r = b-\epsilon) \right]$$

$$= \lim_{\epsilon \to 0} \left[0 - \frac{Q}{2\pi\epsilon_0 L (b-\epsilon)} \right] = -\frac{Q}{2\pi\epsilon_0 L b} = \frac{-Q/2\pi L b}{\epsilon_0} = \frac{\sigma_b}{\epsilon_0}$$

$$\left[\because \sigma_b = \frac{-Q}{2\pi b L} = \text{surface charge density of outer cylinder with charge } -Q\right]$$

For potential

$$\lim_{\epsilon \to 0} \left[V(r = b+\epsilon) - V(r = b-\epsilon) \right]$$

$$= \lim_{\epsilon \to 0} \left[\frac{Q}{2\pi\epsilon_0 L} \ln\left(\frac{a}{b}\right) - \frac{Q}{2\pi\epsilon_0 L} \ln\left(\frac{a}{b-\epsilon}\right) \right]$$

$$= \frac{Q}{2\pi\epsilon_0 L} \ln\left(\frac{a}{b}\right) - \frac{Q}{2\pi\epsilon_0 L} \ln\left(\frac{a}{b}\right) = 0$$

3. To find the capacitance of the co-axial cylinder system (inner cylinder $+Q$, outer cylinder $-Q$)

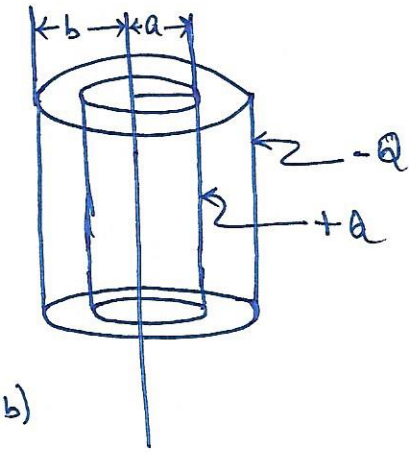

Let's calculate the voltage between two cylinders.

$$V = V_+ - V_- = -\int_{(-)}^{(+)} \vec{E} \cdot d\vec{l}$$

We have already computed the electric field in the region between two cylinders ($a < r < b$) to be $\vec{E} = \dfrac{Q}{2\pi \epsilon_0 r L}\hat{r}$

$$V = -\int_{r=b}^{a} \frac{Q}{2\pi \epsilon_0 r L}\, dr = \frac{Q}{2\pi \epsilon_0 L} \ln\left(\frac{b}{a}\right)$$

$$= \frac{Q}{C}$$

$$\therefore \boxed{C = \frac{2\pi \epsilon_0 L}{\ln(b/a)}}$$

Capacitance is independent of total charge Q - it depends upon the geometry of the system (i.e shapes/sizes of conductors)

4. It is given that the sphere has a charge density

$$\rho = k\frac{R}{r^2}(R - 2r)\sin\theta = \rho(r, \theta)$$

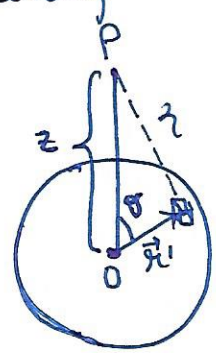

As we are asked to find approximate potential, we should think in terms of multipole expansion of potential. Consider a volume element $d\tau'$ inside the sphere at a distance $\vec{r}'$ from center (origin). Let $\vec{r}$ be the separation vector from the volume element to the field point P.

From the theory of multipole expansion of potential, it was shown that:

$$\frac{1}{\mathscr{r}} = \frac{1}{r}\sum_{n=0}^{\infty}\left(\frac{r'}{r}\right)^n P_n(\cos\theta) \quad \text{where}$$

$$\boxed{V(\vec{r}) = \frac{1}{4\pi\epsilon_0}\int \frac{\rho(r')\,d\tau'}{\mathscr{r}}}$$

that is $\frac{1}{\mathscr{r}}$ can be expressed as inverse powers of r when r is the distance of field point w.r.t origin

~~Let's find each term~~

~~$n=0$, monopole term:~~

$$\boxed{V(r) = \frac{1}{4\pi\epsilon_0}\sum_n \frac{1}{r^{n+1}}\int \rho(\vec{r}')(r')^n P_n(\cos\theta)\,d\tau'} \quad \text{— (a)}$$

θ → angle bet. $\vec{r}$ and $\vec{r}'$

In this problem, it is clear $r = z$ which we are going to incorporate at last.

Monopole ($n=0$) term

$$V_{mono} = \frac{1}{4\pi\epsilon_0 r}\int \rho(\vec{r}')\,P_0(\cos\theta)\,d\tau' \qquad P_0(\cos\theta) = 1$$

$$\boxed{d\tau' = r'^2\,dr'\,\sin\theta\,d\theta\,d\varphi}$$

[primed co-ordinates denote points inside $d\tau$] — (c)

$$\boxed{\rho(r') = \frac{kR}{r'^2}(R-2r')\sin\theta} \quad \text{— (b)}$$

$$V_{mono} = \frac{1}{4\pi\epsilon_0 r}\,kR\int_{r'=0}^{R}\frac{(R-2r')}{\cancel{r'^2}}\,\cancel{r'^2}\,dr'\int_0^{\pi}\sin^2\theta\,d\theta\int_0^{2\pi}d\varphi$$

r' integral → $\quad R r' - \frac{2}{2}r'^2\Big|_0^R = R^2 - R^2 = 0$

$$\boxed{V_{mono} = 0}$$

Dipole ($n=1$) term:

$$V_{dip} = \frac{1}{4\pi\epsilon_0}\frac{1}{r^2}\int \rho(r')\,r'\,P_1(\cos\theta)\,d\tau' \qquad P_1(\cos\theta) = \cos\theta$$

$$= \frac{1}{4\pi\epsilon_0 r^2}\int_{r'=0}^{R}\frac{kR}{r'^2}(R-2r')\,r'^3\,dr'\int_{\theta=0}^{\pi}\cos\theta\sin^2\theta\,d\theta\int_{\varphi=0}^{2\pi}d\varphi$$

[using eqs (a), (b), (c)]

θ integral $\quad P_\theta = \int_0^{\pi}\cos\theta\sin^2\theta\,d\theta = \int_0^{\pi}\sin^2\theta\,d(\sin\theta) = \frac{1}{3}\sin^3\theta\Big|_0^{\pi} = 0$

$$\boxed{V_{dipole} = 0}$$

Quadrupole ($n=2$) term:

$$V_{quad} = \frac{1}{4\pi\epsilon_0}\frac{1}{r^3}\int \rho(r')\,(r')^2\,P_2(\cos\theta)\,d\tau'$$

using (a)

$$V_{quad} = \frac{1}{4\pi\epsilon_0 r^3}\int_{r'=0}^{R}\frac{kR}{r'^2}(R-2r')(r')^4\,dr'\int_0^{\pi}\sin^2\theta\,\frac{1}{2}(3\cos^2\theta-1)\,d\theta\int_0^{2\pi}d\varphi \quad \text{—(d)}$$

$$\left[\because P_2(\cos\theta)=\frac{1}{2}(3\cos^2\theta-1)\right]$$

$$V_{quad} = \frac{1}{2}kR\,\frac{1}{4\pi\epsilon_0 r^3}\int_{r'=0}^{R} r'^2(R-2r')\,dr'\int_{\theta=0}^{\pi}\sin^2\theta\,(3\cos^2\theta-1)\,d\theta\times 2\pi$$

r' integral

$$\int_0^R r'^2(R-2r')\,dr' = \frac{R}{3}r'^3\Big|_0^R - \frac{2}{4}r'^4\Big|_0^R$$

$$= \frac{R^4}{3}-\frac{R^4}{2} = -\frac{R^4}{6}$$

θ integral

$$P_\theta = \int_0^{\pi}\sin^2\theta\,(3\cos^2\theta-1)\,d\theta = \int_0^{\pi}3\cos^2\theta\sin^2\theta\,d\theta - \int_0^{\pi}\sin^2\theta\,d\theta$$

$$= \frac{3}{4}\int_0^{\pi}\sin^2 2\theta\,d\theta - \int_0^{\pi}\sin^2\theta\,d\theta$$

$$\boxed{\int\sin^2 ax\,dx = \frac{x}{2}-\frac{\sin 2ax}{4a}}$$

(Use this standard integral)

$$= \frac{3}{4}\,\frac{\pi}{2}-\frac{\pi}{2} = -\frac{\pi}{8}$$

Eqn (d) gives

$$V_{quad} = \frac{1}{2}kR\,\frac{\times 2\pi}{4\pi\epsilon_0 r^3}\left(-\frac{R^4}{6}\right)\left(-\frac{\pi}{8}\right) = \frac{1}{4\pi\epsilon_0}\left(\frac{k\pi^2R^5}{48z^3}\right) \quad [\text{putting } r=z]$$

Answer

Thus we see that although first two terms (viz monopole and dipole) are zero, the third term (quadrupole) is non-zero. This is the advantage of multipole expansion.